EBELCO®

SECURITY . QUALITY . RELIABILITY

CE

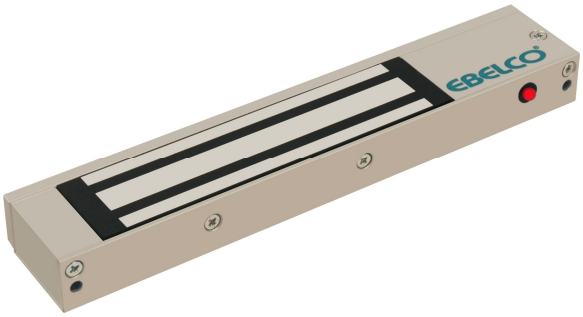

EM300-LED

The EBELCO 300 series electromagnetic locks are renown with its holding force in compact size and the remarkable features.

The series with CE compliance are manufactured under the highest quality control to achieve the commitment to customer who always satisfied with maximum quality and reliability.

SPECIFICATIONS:

- **Voltage Input :** 12 VDC / 24 VDC
- **Current Draw :** 12V / 320mA ; 24V / 160mA (±5%)
- **Holding Force :** Up to 300 lbs (136 kg)
- **Hall Effect Contact :** SPDT rated 2A at 24 VDC
- **Anti-Rust Surface Treatment :** Blue Zinc Plating
- **Operating Temperature :** 0~55° C (32~131° F)
- **Operating Humidity :** 0~95% (non condensing)
- **Weight (Magnet) :** 0.7 kg (±1%)
- **Dimensions :** Magnet - (L)210x(W)35x(T)21 mm
  Armature - (L)130x(W)33x(T)11 mm

FEATURES:

- **Dual Voltage Selectable (12 VDC or 24 VDC)**
- **Low Current Consumption**
- **Reliable Holding Force**
- **Hall Effect Sensor Monitoring Output**
- **Green/Red LED Indication for EM Lock Status**
- **Durable and Silence Operation**
- **Cosmeticize Anodized Aluminum Casing**
- **Surge & Spike Protection PCB**
- **Compact Size for Small Doors, Cabinets etc.**
- **Full Range of Optional Brackets**
- **Zero Residual Magnetism Design**

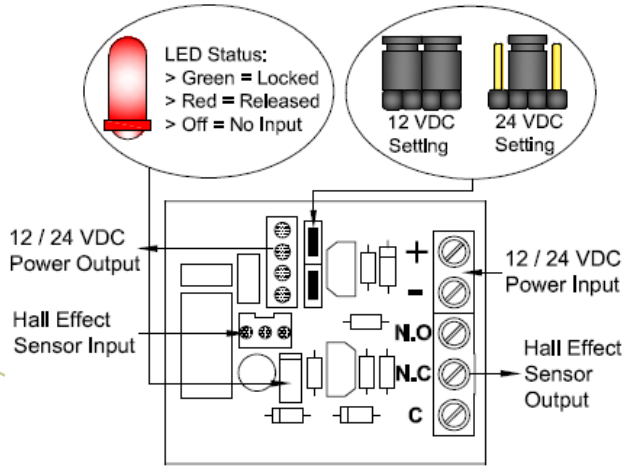

IMPORTANT!

Set the jumper position according to the power Input correctly before switch ON the power.

Disclaimer :

EBELCO reserve the right to go ahead with any modifications of models or features or price without forewarning.
All the information and specifications stated in this document are current at the time of publication.

SECURITY . QUALITY . RELIABILITY

EBELCO INDUSTRIES SENDIRIAN BERHAD
15,Jalan Cheng Perdana 1/4,Taman Cheng Perdana,75050 Melaka,Malaysia. Tel: 606-3122213 & Fax: 606-3122212
Website : www.ebelco.com ; E-mail : enquiry@ebelco.com

© Ebelco Copy Right 2006.